Optimal STATCOM Allocation Using Mixed Integer Distributed Ant Colony Optimization

Bilal H. Al-Majali
Electronic and Electrical Engineering
Brunel University London
Uxbridge, United Kingdom
1934837@brunel.ac.uk

Ahmed F. Zobaa
Electronic and Electrical Engineering
Brunel University London
Uxbridge, United Kingdom
azobaa@ieee.org

Ioana Pisica
Electronic and Electrical Engineering
Brunel University London
Uxbridge, United Kingdom
Ioana.Pisica@brunel.ac.uk

Oguzhan Ceylan
Electrical and Electronic Engineering
Marmara University
Istanbul, Turkey
Oguzhan.Ceylan @marmara.edu.tr

2023 IEEE Conference on Power Electronics and Renewable Energy (CPERE) | 978-1-6654-5233-5/23/$31.00 ©2023 IEEE | DOI: 10.1109/CPERE56564.2023.10119602

***Abstract*— This paper presents a novel optimization approach to find the optimal STATCOM installation in the power system using Mixed Integer Distributed Ant Colony Optimization (MIDACO). The proposed method is mathematically formulated based on minimizing the Voltage Deviation Index (VDI) and the installation cost of STATCOM. The ability of STATCOM to provide shunt compensation to maintain bus voltage is exploited here. The proposed approach has been tested on the standard IEEE 14-bus system.**

Keywords—STATCOM, MIDACO, Voltage Stability (key words**)**

I. Introduction

The extension of the electrical power system, increased demand, various contract types, and loop flows are only some of the factors that are contributing to the growing complexity of the power system. As a result, the development of new sources of generation and the installation of additional transmission lines are required in order to satisfy the growing demand. However, due to a confluence of financial, climatic, and geographic factors, the installation of new transmission lines to reduce congestion is now difficult. The only option that is now accessible is to maximise efficiency in the utilisation of the transmission lines that are already in service. In order to make this a reality, the Flexible AC Transmission System, abbreviated as FACTS, is the solution.

FACTS devices are power electronic based devices, which can be used to improve power system reliability by lowering system losses, boosting system power transmission flow quality and keeping both the voltage profile on all buses and the thermal protection of all transmission lines. However, because FACTS are expensive devices, so they require proper use in to derive the greatest possible advantage from their use. Additionally, if the device is not located in the most advantageous place in the network, there may be an adverse effect on the power system [1].

To get the maximum performance from FACTS devices, they should be deployed in the power system with optimal location and sizing. Many researchers have used several optimization approaches to optimize the position and the rating of FACTS devices. These optimization approaches are based on several strategies and can be divided into three categories: (i) analytical approaches [2] [3], (ii) conventional optimization-based approaches [4], and (iii) metaheuristic optimization approaches.

The following sections comprise this paper: Section 1 covers the introduction, and the background in section II followed by the modeling of STATCOM in section III then the problem formulation in section IV, and the MIDACO implementation is discussed in section V. Sections VI and VII shows the results and the conclusion respectively.

II. Background

Several studies have employed metaheuristic optimization algorithms to determine the best placement of FACTS devices in the electrical power system. [5 – 8]. One of the clear advantages of metaheuristic optimization algorithms that are considered as an adaptive algorithm that capable of finding global optimal solution for many types of optimization problems. The metaheuristic algorithms are generally a nature-inspired techniques such like genetic algorithm (GA), particle swarm optimization (PSO), bacterial foraging algorithm (BFA) and gravitational search algorithm (GSA).

Different optimization approaches based on metaheuristic algorithms have been introduced in many papers with different optimization techniques and objectives to enhance the overall system stability using FACTS devices. Authors in ref [9], introduced a hybrid optimization approach by using PSO adaptive GSA hybrid approach to allocate the optimal rating of FACTS controllers to enhance the voltage profile and minimize losses. A multi-objective optimization algorithm based on PSO was used in [10] to find the optimal placement of FACTS devices to enhance the voltage profile of a distribution network. In [11], effective particle swarm optimization (EPSO) was used as an optimization algorithm to reach the optimal installation of FACTS devices to minimize the power losses and the fuel cost. Reference [12], examined the optimal FACTS devices integration in electrical power system to improve the voltage stability by enhancing the loading margin of the system, genetic algorithm was used to find the best integration of FACTS devices. In [13], the optimal allocation was carried out to enhancing the electrical

Authorized licensed use limited to: ULAKBIM UASL - MARMARA UNIVERSITY. Downloaded on June 05,2023 at 11:41:46 UTC from IEEE Xplore. Restrictions apply.

system stability security using the biogeography optimization BBO and weight improved PSO.

In this paper, the proposed algorithm is chosen for the purpose of improving the voltage profile throughout the system with a minimum STATCOM cost of installation, in order to achieve these objectives MIDACO has been chosen as an optimization tool. Results Obtained by MIDACO are compared to those obtained by GA and artificial bee colony algorithm (ABC).

III. STATCOM

Series controllers, shunt controllers, and combined series-shunt controllers are the three types of FACTS controllers. Shunt FACTS devices, such as STATCOM and SVC, are commonly used for voltage stability enhancement.

STATCOM is a second-generation FACTS device that was developed with the purpose of improving the stability of the power system. The principle that underpins STATCOM is referred to as the reactive power compensation, and it enables adjustments to be made not only to the amount of reactive power present in the system but also to the voltage magnitude at the buses.

In general, a STATCOM is a voltage source that can convert DC to AC. However, if the voltage that it creates is higher than the voltage that is present on the load bus, it will function in capacitive mode and produce reactive power. If the voltage that it generates is lower than the voltage that is present on the load bus, then it will function in inductive mode and absorb reactive power. On the other hand, STATCOM is operated like a synchronous generator, despite the fact that its actual power output is zero, and its voltage is fixed to some value of reference [14].

The STATCOM is made up of several different parts, the most important of which are a coupling transformer, a voltage source inverter, and a dc side capacitor. The diagram of the single line is seen in Fig. 1.

After connection of STATCOM to bus i the reactive power flow equations are given below [15]:

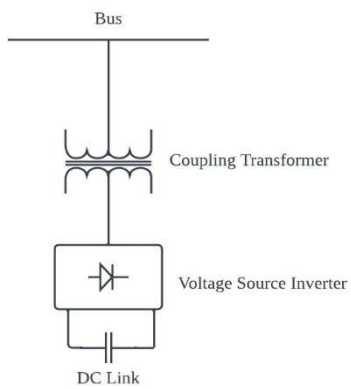

Fig. 1. STATCOM

$$Q_i = Q_{sh} + \sum_{j=1}^{M} V_i V_j Y_{ij} \sin(\theta_{ij} - \delta_{ij}) \quad (1)$$

$$Q_{sh} = B_{sh} V_i^2 - V_i V_{sh} Y_{sh} \sin(\theta_{ish} - \delta_{sh}) \quad (2)$$

Where Q_i is reactive power at bus i, Q_{sh} is reactive power from STATCOM. B_{sh} and Y_{ij} , are susceptance and admittance of STATCOM respectively, Y_{ij} is the admittance of the line between bus i and j with angle δ_{ij}, M is the number of buses and V_{sh} is the STATCOM voltage.

IV. PROBLEM FORMULATION

The objective function in this paper is a multi-objective function which is composed of minimization:

A. STATCOM Instllation Cost (C)

$$C = C_{STATCOM} * S * 1000 \quad (3)$$

Where S is the size of the STATCOM device in (Mvar), $C_{STATCOM}$ is the total investment cost of the STATCOM device in (US$/Kvar) that can be gotten from the data proposed by Siemens, the formula of the $C_{STATCOM}$ for STATCOM in this optimization is:

$$C_{STATCOM} = 0.000375S^2 - 0.3041S + 162.4 \ (\$/hr) \quad (4)$$

B. Voltage Deviation Index (VDI)

The voltage deviation index is a voltage stability index, and the value of it represents the difference between one per unit and bus voltage as a function of per-unit value, equation (5) calculates the overall voltage deviation index for all N buses.

$$VDI = \sum_{i=1}^{N} \left(\frac{V_{\text{ref}} - V_i}{V_{\text{ref}}}\right)^2 \quad (5)$$

Here, V_i is the voltage magnitude at bus i and V_{ref} is the nominal voltage at bus i and it is considered to be 1 per unit.

These objectives are subject to equality constraints which are the power balance equation for the load flow, and an inequality constrain which is the bus voltage limit.

$$V_{min} \leqslant V_i \leqslant V_{\max} \quad (6)$$

Where V_{min} is the minimum voltages at buses and it is 0.95, while $V_{\max}$ is the maximum voltages at buses and it is 1.05 per unit.

V. PROPOSED OPTIMIZATION TECHNIQUE

In this particular piece of research, the MIDACO solver serves as the optimization method. The Ant Colony Optimization (ACO) algorithm was combined with the Oracle Penalty Method to create the new extension of (ACO) algorithm known as MIDACO.

Marco Dorigo first introduced ACO in the 1990s in his Ph.D. thesis [16]. This algorithm is introduced based on how ants forage to find a route between their colony and a food source. It was initially employed to address the infamous travelling salesperson dilemma. Later, it is used to a variety of challenging optimization issues.

Social insects include ants. They are colony animals. The ant's primary motivation is to find food, which governs their behavior. Ants are scurrying about their colonies while looking. An ant will hop back and forth rather frequently in order to locate food. As it travels across the ground, an

Authorized licensed use limited to: ULAKBIM UASL - MARMARA UNIVERSITY. Downloaded on June 05,2023 at 11:41:46 UTC from IEEE Xplore. Restrictions apply.

organic compound that resembles a pheromone is left behind by it. Ants are able to communicate with one another via pheromone trails that they leave behind. When an ant finds food, it immediately tries to carry away as much of it as it can. Based on the quantity and quality of the meal, it scatters pheromones on the routes when it returns. Ants have pheromone senses. Other ants will therefore follow that trail after smelling it. The likelihood of picking that road increases with pheromone level, As more ants follow the road, the amount of pheromone on that path increases.

At MIDACO, a unique extension of the ACO metaheuristics was created for search domains that contain mixed integers. The worth of this extension may be seen in how well it maintains its integrity across essential components of its functionality. The technique leveraged the idea of pheromone-controlled probability functions (PDFs) for discrete domains [17] as an alternative to employing a pheromone table. Integer variables can be instinctively controlled with this way.

However, there are certain customizable factors that have been incorporated in MIDACO. Ants and kernels are the first two of these parameters. The tuning of the parameter (kernel) affects the convergence speed of the algorithm, whilst the tuning of the parameter (ants) is responsible for choosing the number of ants that MIDACO generates each one generation. Both the (kernel) parameter and the (ants) parameter are required to be utilised in order to proceed [18].

In this paper, the value of the (ants) parameter is set to zero, which is the default value. This means that MIDACO will dynamically change the number of ants that are produced by each generation. Additionally, the value of the (kernel) parameter will also be set to zero as the default.

Also, there are other additional parameters that are used for solving multi objective problem. MIDACO employs the idea of utopia-nadir balancing for multi-objective problems, where utopia represent the optimum solution and nadir represent the worst solution. Based on that, MIDACO uses the BALANCE parameter and by tuning this parameter to the default value -which is zero- The MIDACO represents the part of the Pareto front that is located in the middle since this part offers the most evenly balanced trade-off between all of the distinct objective functions. Using the utopia-nadir balance in the MIDACO helps the algorithm to focus on particular part of the Pareto front, without the necessity of first measuring the quantity of scaling factor [19].

In addition to that, MIDACO employs the PARETOMAX parameter in conjunction with the EPSLION parameter in order to solve the multi-objective issue. In this study, the value of PARETOMAX, which determines the maximum number of pareto points, is determined to be 1000. On the other hand, the value of EPSLION, which is used by MIDACO to determine the accuracy of its multi-objective pareto-dominance filter, is determined to be 0.001 in this paper.

MIDACO was used in this paper as a multi objective optimization technique to find optimal size and location of STATCOM. Fig. 2 shows the flow chart of the optimization approach using MIDACO.

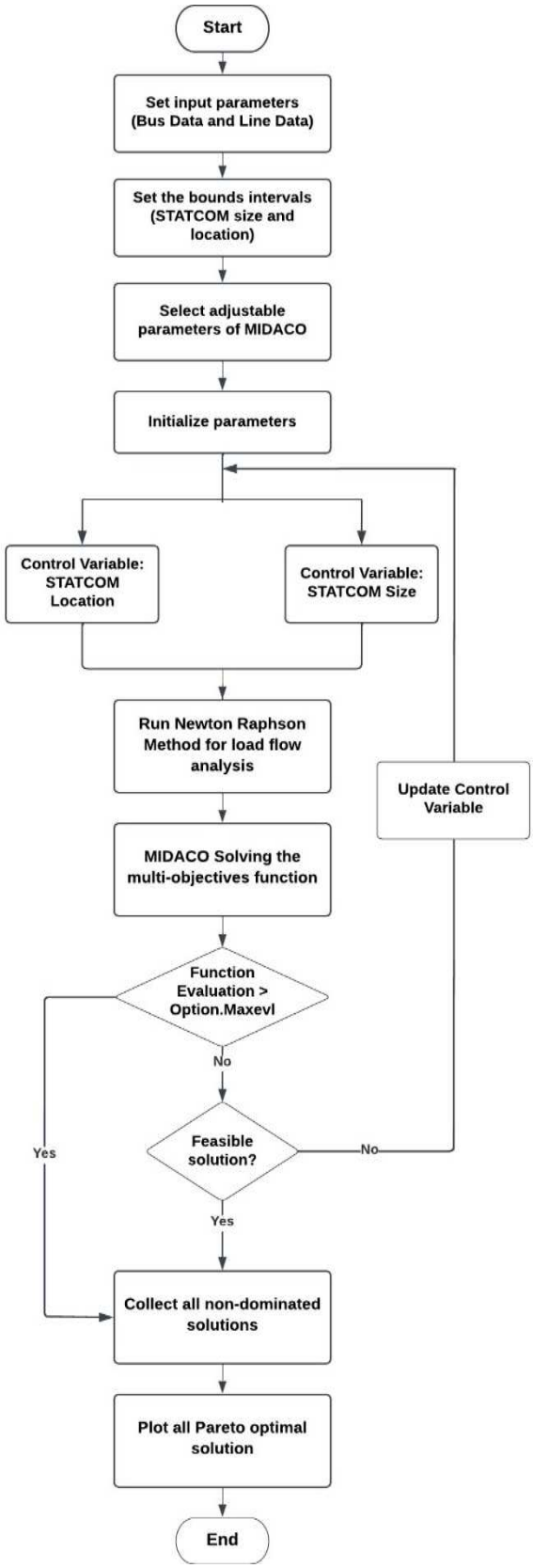

Fig. 2. Flow chart of the optimization approach using MIDACO

Authorized licensed use limited to: ULAKBIM UASL - MARMARA UNIVERSITY. Downloaded on June 05,2023 at 11:41:46 UTC from IEEE Xplore. Restrictions apply.

VI. Results and Discussion

The proposed optimization approach with MIDACO technique has been tested on the IEEE 14-bus system shown in Fig. 3, which has 20 transmission lines, 9 load buses and 5 generators to find the optimal placement and rating of STATCOM. The power flow analysis is done with the Newton-Raphson method which coded in MATLAB software.

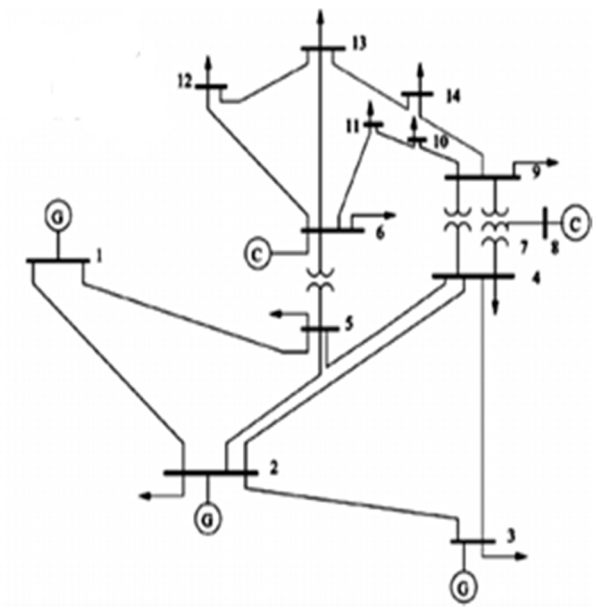

Fig. 3. IEEE 14-bus system [20]

For minimizing both of VDI and STATCOM installation cost, MIDACO solver found the optimal bus location of STATCOM to be installed at is bus 12 with rating of 8 Mvar. Fig. 4 shows voltage profile of the test system before and after installation the STATCOM at bus 12

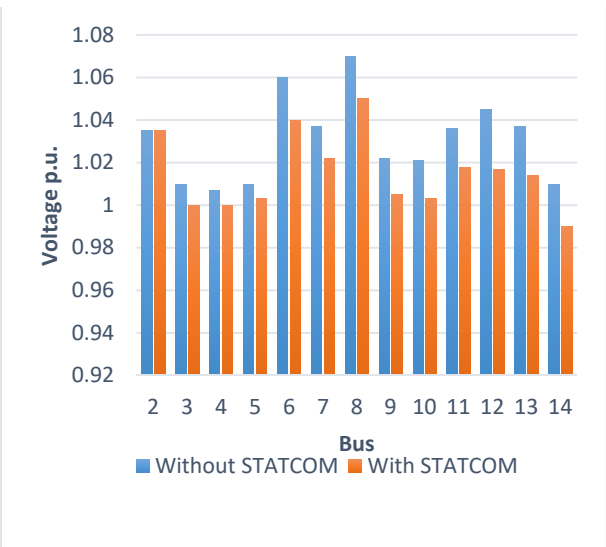

Fig. 4. IEEE 14-bus system voltages without STATCOM and with STATCOM at bus 8

Fig.4 shows how the STATCOM improved the voltage profile of the network by reducing the VDI from 0.0206 to 0.0103. In other words, STATCOM at optimal location with optimal rating is efficient enough to make a 50% reduction in the VDI.

Table 1 shows the optimal location and rating of STATCOM after implementing the proposed optimization approach on the test system, the results has been also compared with two other evolutionary computation techniques genetic algorithm [21] and artificial bee colony algorithm (ABC) [22].

TABLE I. Optimal Location and Sizing of STATCOM

	Optimization technique		
	MIDACO	***GA***	***ABC***
STATCOM location (Bus no.)	12	6	12
STATCOM size (Mvar)	8	11	10

According to the table 1, it can be seen that ABC and MIDACO have the reach the same solution regarding to the STATCOM bus location which is bus 12, while GA have different bus suggestion for STATCOM location at bus 6. However, each algorithm suggests different STATCOM size, where the MIDACO gives the lowest size rating of STATCOM 8 Mvar, and GA gives the higher size rating of STATCOM 11 Mvar.

Fig. 5. Show a comparison on how the results from MIDACO, GA and ABC regarding the STATCOM size and location have affected the VDI and the STATCOM installation cost.

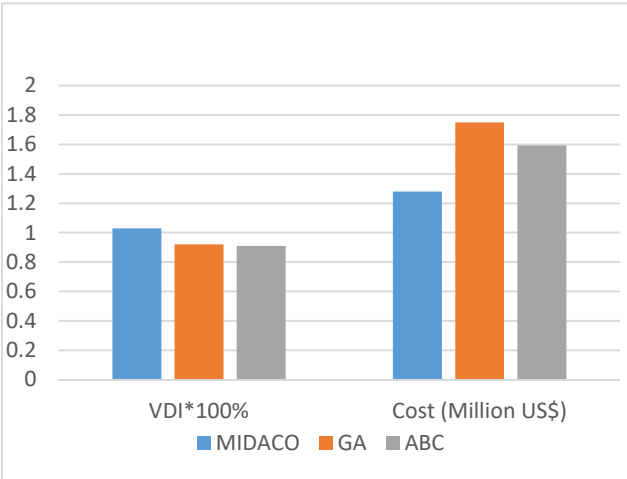

Fig. 5. VDI and installation cost comparison

Even though the VDI reduction from GA and ABC is slightly better than MIDACO according to Fig. 5, MIDACO has the lowest installation cost compared with GA and ABC. For the multi-objectives minimization, MIDACO has better results.

Fig. 6 shows the voltage profile for the three optimization techniques, and it can be seen that there are not much different between them even though the STATCOM size from MIDACO approach is the lowest and the cheapest.

The comparison of computation time between the proposed method with GA and ABC are shown in Fig. 7

Authorized licensed use limited to: ULAKBIM UASL - MARMARA UNIVERSITY. Downloaded on June 05,2023 at 11:41:46 UTC from IEEE Xplore. Restrictions apply.

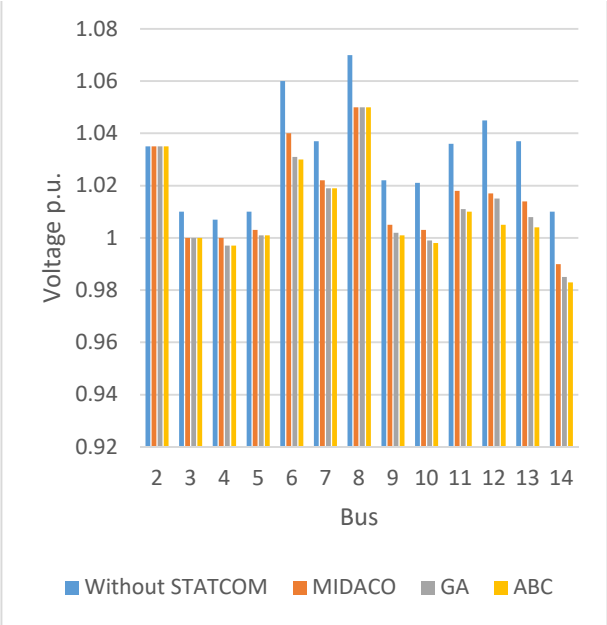

Fig. 6. Voltage profile comparison between MIDACO, GA and ABC.

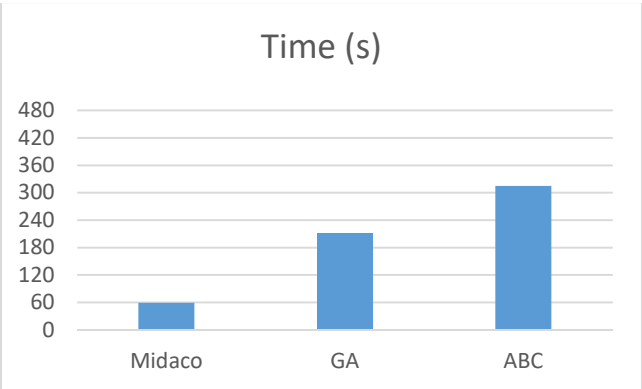

Fig. 7. Computation time comparison

From Fig. 7, the results illustrate that the MIDACO is less computation time compare with other method which consider a big advantage over the other methods.

VII. Conclusion

In this paper, a novel optimization approach has been proposed to find the optimal allocation of STATCOM to improve the voltage profile and enhance the system stability at the lowest possible cost for the installation of STATCOM. MIDACO was used as the optimization technique in this approach and the results have been proved that MIDACO is an efficient technique to handle the multi-objective optimization problem in this work. The optimization approach in this work has been evaluated on IEEE 14-bus system and the performance of the proposed approach was compared with other evolutionary algorithms to validate its efficiency and demonstrate the advantages of the proposed method.

Acknowledgement: This work was partly supported by Newton Fund Institutional Links grant, ID 623801791, under the Newton-Katip Çelebi Fund partnership. The grant is funded by the UK Department for Business, Energy and Industrial Strategy and Tubitak and delivered by the British Council.

Refrences

[1] X.Yu, C.Singh, S.Jakovljevic, D. Ristanovic, G. Hung "Total transfer capabilty considering FACTS and security constrains", Proc IEEE confrence (0-7803-8110-6/03-/517.00), 2003

[2] Rao VS, Rao RS. "Optimal placement of STATCOM using two stage algorithm for enhancing power system static security." Energy Procedia, vol. 117,2017, pp. 575–582.

[3] Sivasankar and K. S. R. Anjaneyulu, ''Maintaining voltage stability by optimal locating and sizing by combined evolutionary algorithm,'' Int. J.Comput. Appl., vol. 84, Dec.2013, pp. 39–45.

[4] T. Kang, J. Yao, T. Duong, S. Yang, X.Zhu, "A hybrid approach for power system security enhancement via optimal installation of flexible AC transmission system (FACTS) devices", Energies, vol.10, no. 9, 2017, pp. 1305-1337.

[5]] Nabavi SM, Khafafi K, Sakhavati A, Nahi S. "Optimal location and sizing of SSSC using genetic algorithm in deregulated power market." Int J Comput Appl. vol. 22, 2011, pp. 37–41.

[6] Ali II. "Optimal location of SSSC based on PSO to improve voltage profile and reduce iraqi grid system losses." *Eng Technol J,* vol. 35, 2017, pp. 372-380.

[7] Musa U et al. "Radial distribution network enhancement with d-statcom using bacterial foraging algorithm arid zone." *J Eng Technol Environ*, vol. 14, 2018, pp. 249-260.

[8] Packiasudha M, Suja S, Jerome J. "A new Cumulative Gravitational Search algorithm for optimal placement of FACT device to minimize system loss in the deregulated electrical power environment." *Int J Electr Power Energy Syst*, vol. 84, 2017, pp. 34-46.

[9] Sai RamH, Venkata Reddy "Engineering Science and Technology, an International Journal", vol. 19, 2016, pp. 1166-1176

[10] Rezaeian-Marjani, Galvani, Vahid, Farhadi-Kangarlu, "Optimal allocation of D-STATCOM in distribution networks including correlated renewable energy sources", International Journal of Electrical Power and Energy Systems, vol. 122, 2020.

[11] Manoz Kumar Reddy, Kailasa Rao, Srinivas Rao, "Optimal deployment of UPFC based on critical bus ranking using an effective PSO algorithm", Materials Today: Proceedings, 2021.

[12] Sreedharan, S., Joseph, T, Joseph, S. "Power system loading margin enhancement by optimal STATCOM integration: a case study" Computers and Electrical Engineering, vol. 81, 2020.

[13] Kavitha. K, Neela, R, "Optimal allocation of multi-type FACTS devices and its effect in enhancing system security using BBO, WIPSO & PSO", Journal of Electrical Systems and Information Technology, vol. 5, 2018, pp. 777-793.

[14] E. Acha, C.R. Fuerte, H. Ambriz and C. Angeles, FACTS: Modelling and Simulation in Power Networks, John Willey & Sons, Ltd.

[15] A. S. Siddiqui, T. Deb, Fahad Iqbal "Optimal location of FACTS device using Meta Heuristic Search Algorithm", INDICON IEEE confrence, 2015.

[16] M. Dorigo, M. Birattari, T. Stutzle, Ant colony optimization, IEEE Comput. Intell.Mag. 1, 2006, pp. 28–39.

[17] M. Schlüter, J.A. Egea, J.R. Banga, Extended ant colony optimization for non-convex mixed integer nonlinear programming, Comput. Oper. Res. 36, 2009, pp.2217–2229.

[18] Schlueter M., Erb S., Gerdts M., Kemble S., Rückmann J.J.h, "MIDACO on MINLP Space Applications", Advances in Space Research (Elsevier), vol. 51, 2013, pp. 1116–1131.

[19] Ahmed F. Zobaa, "Mixed-Integer Distributed Ant Colony Multi-Objective Optimization of Single-Tuned Passive Harmonic Filter Parameters", IEEE Access , vol.7, 2019, pp. 44862-44870.

[20] E. Nasr Azadani , S. H. Hosseinian , P. Hasanpor Divshali & B. Vahidi (Stability Constrained Optimal Power Flow in Deregulated Power Systems, Electric Power Components and Systems, 39:8, 2011, pp 713-732.

Authorized licensed use limited to: ULAKBIM UASL - MARMARA UNIVERSITY. Downloaded on June 05,2023 at 11:41:46 UTC from IEEE Xplore. Restrictions apply.

[21] Forrest, S., “Genetic algorithms: Principles of natural selection applied to computation”, Science 261, 1993, pp. 872–878.

[22] Mostapha Kalami Heris, Artificial Bee Colony in MATLAB (URL: https://yarpiz.com/297/ypea114-artificial-bee-colony), Yarpiz, 2015.

Authorized licensed use limited to: ULAKBIM UASL - MARMARA UNIVERSITY. Downloaded on June 05,2023 at 11:41:46 UTC from IEEE Xplore. Restrictions apply.